Pressure Cleaning Rotating Nozzle

Series Models

7632.30, 7632.35, 7632.40, 7632.45
7632.50, 7632.55, 7632.60, 7632.65
7632.70, 7632.80

FEATURES & BENEFITS

- High impact, rotating straight stream with 20° angle for intense cleaning action.
- Heavy duty, long wearing ceramic nozzle and seat for exceptional life.
- Rotating nozzle can be started and used in any position.
- Corrosion resistant brass construction with non-marring red cover.

SPECIFICATIONS

	U.S. Measure	Metric Measure
Flow Range	2.4 to 9.0 gpm	(9.1to 34 l/m)
Pressure Range	2600 to 5100 psi	(180 to 350 bar)
Maximum Temperature	212°F	(100°C)
Inlet Fitting	1/4" BSPF	(1/4" BSPF)
Weight	14.46 oz.	(0.41 kg)
Dimensions	1.61 x 3.82"	(41 x 97 mm)

SELECTION: The design of this rotating nozzle with its 0° degree stream means more efficient cleaning with less water. The 7632 rotating nozzle is available in a wide range of standard nozzle sizes to meet your system requirements of pressure and flow. A convenient chart is provided to aid in the selection of the correct nozzle size. The nozzle size is machined into every nozzle next to the threaded port, plus a colored dot on the front of the nozzle identifies the size. Note that the minimum pressure to assure smooth rotation is 2600 PSI. The maximum pressure for the 7632 series is 5100 PSI.

INSTALLATION: The 7632 rotating nozzle is designed for mounting on a lance and can be used in any position. Position the nozzle for desired impact and coverage from the target. A position closer to the target will result in more impact and cleaning action. A position farther away from the target will result in wider spray coverage. Install the rotating nozzle using the 1/4" BSPF fitting. Use tape or pipe sealant on the adjoining threaded BSPM fitting and tighten the nozzle onto the fitting.

OPERATION: The 7632 rotating nozzle is specially designed, 0° straight stream nozzle that rotates at a 20° angle for high impact cleaning using less water. Its efficient high speed rotating jet of water offers better cleaning intensity than traditional flat fan nozzles. The nozzle uses an internal balanced and guided turbine to positively rotate the ceramic nozzle at high speed for complete cleaning coverage. The ceramic nozzle provides excellent wear resistance and long service life. **Note:** Test small area to determine best cleaning result for selected surface and to avoid damage.

MAINTENANCE: Replacement nozzle assemblies are available for each size nozzle for periodic maintenance. If the nozzle stops rotating, remove the nozzle and disassemble. Clean the internal passages of foreign material. If the nozzle losses pressure, remove the nozzle and disassemble. Replace the worn internal ceramic assembly. Do not adjust the unloader valve to compensate for the loss of pressure.

⚠ WARNING

Always shut system off when changing guns, lances and nozzles to avoid accidental damage or injury.

EXPLODED VIEW

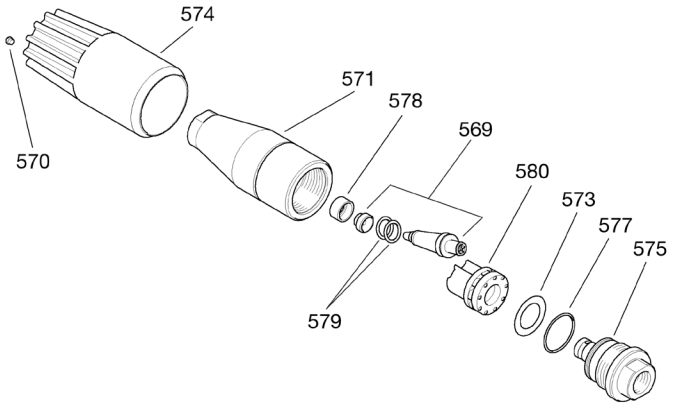

PARTS LIST

ITEM	P/N	MATL	DESCRIPTION	QTY
569	76401	BBCC	Nozzle Assy (3.0) White	1
	76402	BBCC	Nozzle Assy (3.5) Brown	1
	76403	BBCC	Nozzle Assy (4.0) Dark Yellow	1
	76404	BBCC	Nozzle Assy (4.5) Blue	1
	76406	BBCC	Nozzle Assy (5.0) Light Purple	1
	76407	BBCC	Nozzle Assy (5.5) Dark Red	1
	76408	BBCC	Nozzle Assy (6.0) Dark Green	1
	76409	BBCC	Nozzle Assy (6.5) Light Blue	1
	76412	BBCC	Nozzle Assy (7.0) Orange	1
	76413	BBCC	Nozzle Assy (8.0) Silver	1
570	—	NY	Plug	1
571	—	BB	Body	1
573	31829	S	Washer	1
574	31437	—	Protector, Nozzle, Red	1
575	—	BB	Fitting, Inlet (1/4" BSPF)	1
577	32926	NBR	O-Ring, Fitting, Inlet - 90D	1
578	—	CC	Insert	1
579	31601	NBR	O-Ring, Nozzle (After 6/07)	2
580	31832	—	Turbine	1

MATERIAL CODES (Not Part of Part Number): BB=Brass BBCC=Brass/Ceramic
CC=Ceramic NBR=Medium Nitrile (Buna-N) NY=Nylon S=304SS

7632 NOZZLE SELECTION CHART

Model	Nozzle Size	Color Coded Plug	Nozzle Flow (GPM) at Various Pressures					
			2600 PSI 180 BAR	3000 PSI 210 BAR	3500PSI 240 BAR	4000 PSI 275 BAR	4500 PSI 310 BAR	5100 PSI 350 BAR
7632.30	3.0	White	2.4	2.6	2.9	3.0	3.2	3.4
7632.35	3.5	Brown	2.8	3.1	3.3	3.5	3.7	3.9
7632.40	4.0	Dk Yellow	3.2	3.5	3.8	4.0	4.2	4.5
7632.45	4.5	Blue	3.6	3.9	4.3	4.5	4.8	5.1
7632.50	5.0	Lt Purple	4.0	4.4	4.7	5.0	5.3	5.6
7632.55	5.5	Dk Red	4.4	4.8	5.2	5.5	5.8	6.2
7632.60	6.0	Dk Green	4.8	5.2	5.6	6.0	6.4	6.7
7632.65	6.5	Lt Blue	5.2	5.7	6.0	6.5	6.9	7.3
7632.70	7.0	Orange	5.6	6.1	6.6	7.0	7.4	7.9
7632.80	8.0	Silver	6.4	7.0	7.5	8.0	8.5	9.1

TROUBLESHOOTING

Will not rotate	• Ceramic seat or nozzle chipped or broken. Replace as needed.
No flow from nozzle	• Nozzle plugged. • Low flow to pump. • Filter to pump clogged.

⚠ WARNING

Severe injury can occur with high pressure spray.
Do not allow spray to contact any part of body.

WARRANTY

90 Day Warranty
Refer to complete CAT PUMPS Warranty for further information.

DIMENSIONAL

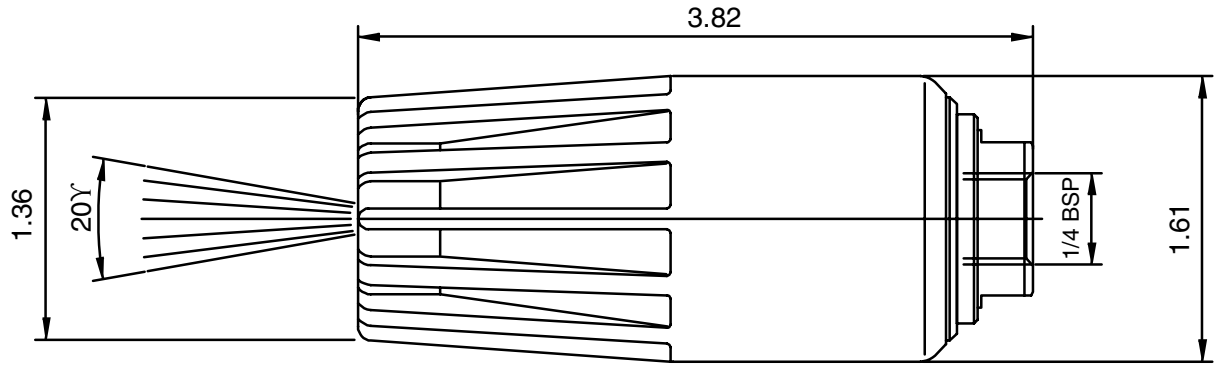

The Pumps with Nine Lives

CAT PUMPS
1681 - 94TH LANE N.E. MINNEAPOLIS, MN 55449-4324
PHONE (763) 780-5440 — FAX (763) 780-2958
e-mail: techsupport@catpumps.com
www.catpumps.com

For International Inquiries go to www.catpumps.com and navigate to the "Contact Us" link.

PN 993277 Rev D 7/11 71124